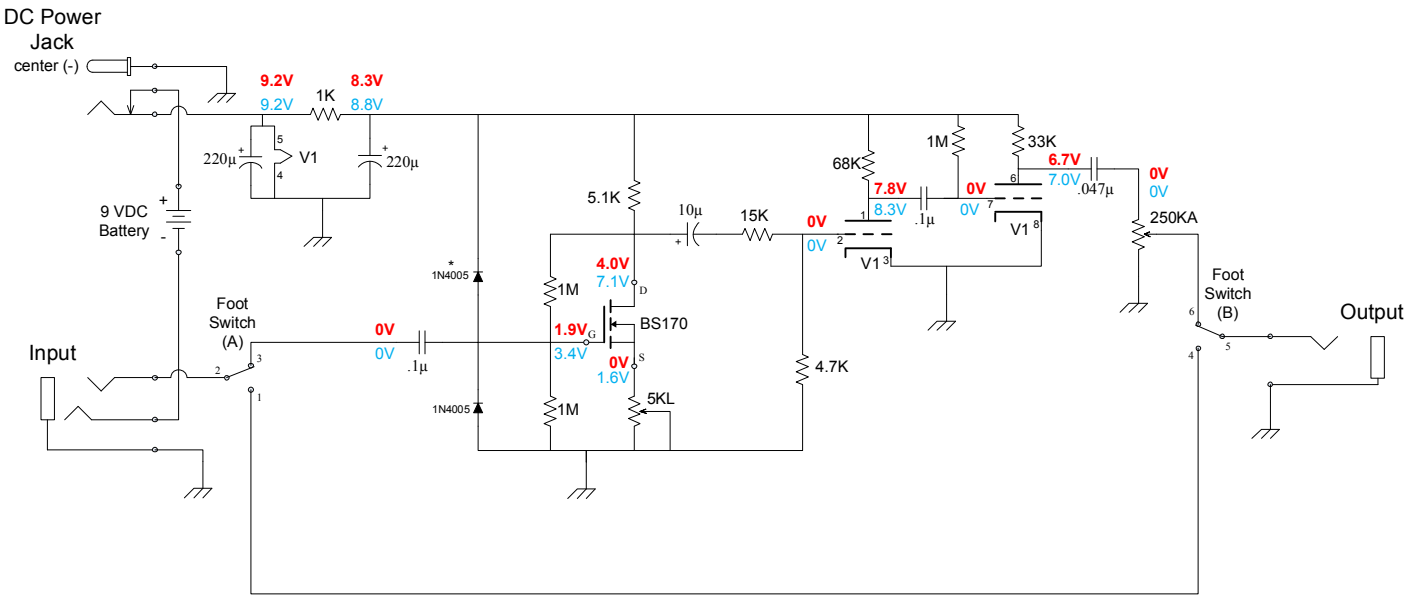

DPDT Foot Switch

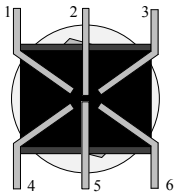

BS170
N-Channel
MOSFET

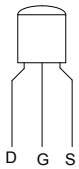

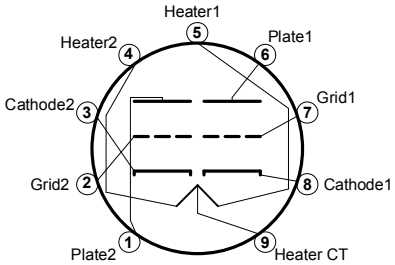

V1 (12AX7) BASING DIAGRAM

BOLD = DC measurement at maximum gain
PLAIN = DC measurement at minimum gain

**Diodes are there to protect the MOSFET from static and accidental reverse polarity.*

www.modkitsdiy.com

Copyright © 2010 by modkitsdiy.com

"The Persuader" (K-930)
Schematic